AUTO RADIO SERVICE MANUAL

AR-1000 SERIES

AT-1110

AT-1120

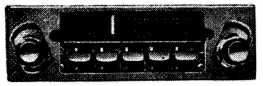

AT-1140

AT-1150

MODEL OUTLINE

TUNER	POWER SUPPLY	CONTROL SHAFT SPACING	MAGNET ANTENNA
AT-1110-1	12V negative grounding	124mm	not applicable
AT-1120-1		130mm	〃
AT-1140-2		124 to 130mm	applicable
AT-1150-1	12V positive grounding	130mm	not applicable

REMARKS: Be sure to use "TEN" Brand magnet antenna to prevent any trouble.

SPECIFICATIONS

Frequency Range	535 to 1605 kHz
Intermediate Frequency	455 kHz
Sensitivity	Better than 24 dB
Selectivity	More than 18dB (±10 kHz detuning)
S/N Ratio	More than 23dB
Electrical Fidelity	−5dB or better at 100 Hz
	−16dB or better at 4 kHz
Audio Output	More than 3 watts
Speaker Impedance	8 ohms
Current Consumption	Approximately 0.32 ampere at 0.5-watt output
Power Supply	12 volts
Transistor and Diode	7 transistors, 1 diode

CIRCUIT STRUCTURE

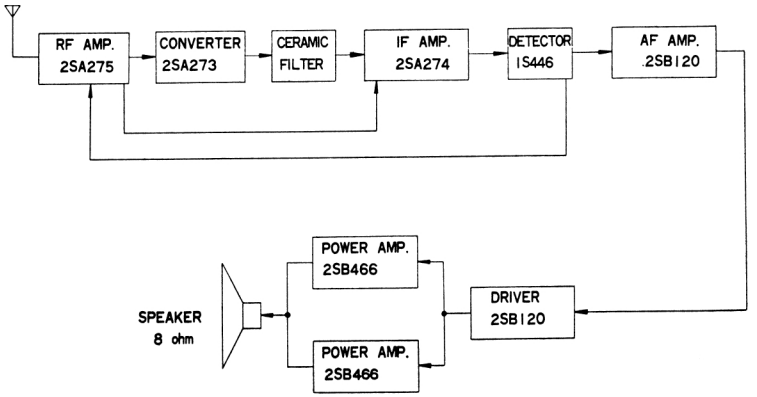

Fig. 1

CONNECTION INSTRUCTION IN ALIGNMENT

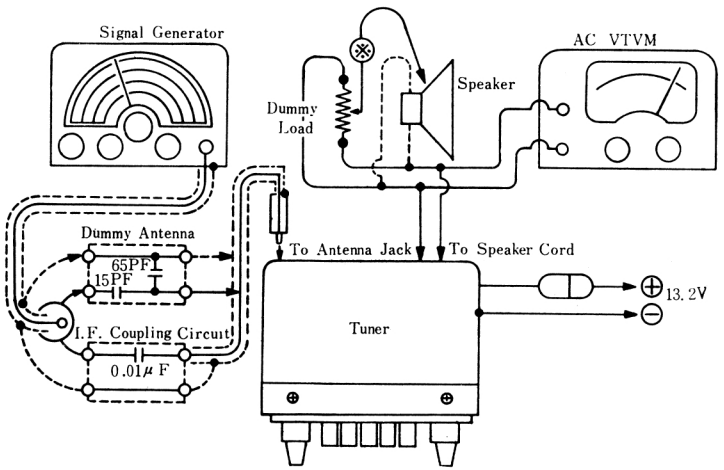

Fig. 6

ALIGNMENT POINTS

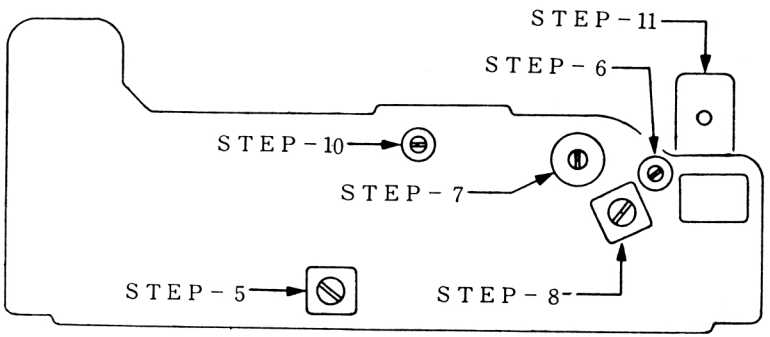

Fig. 7

AR-1000 SERIES

ALIGNMENT PROCEDURE DETAILS

STEP	Ref. Fig. 2, 6 and Fig. 7				
1	Connect an AC VTVM or tester across 8-ohm dummy load or 8-ohm speaker. 3 volts (full scale) on AC VTVM is desirable.				
2	Connect signal generator ground terminal and tuner chassis. Connect signal generator output terminal and tuner antenna receptacle through 0.01μF capacitor. Concerning STEP-7 to 11, connect signal generator output terminal and antenna receptacle through dummy antenna (series 15pF-parallel 65pF).				
3	Set volume to maximum and tone to treble. Supply voltage +13.2 volts.				
	While proceeding with alignment, attenuate signal generator output to maintain 1 to 2 volts on AC VTVM at all times to prevent overloading.				
	GENERATOR CONNECTION	GENERATOR FREQUENCY (400Hz30% mod.)	TUNER SET TO	ADJUST	REMARKS
4	Thru 0.01μF to ANT. RECEPT.	455 kHz	Near 1000 kHz		Adjust signal generator output to maintain 1 to 2 volts on AC VTVM.
5	do.	do.	do.	T_3=STEP-5	Turn IFT core for maximum meter indication.
6	do.	do.	do.	C_{12}=STEP-6	Adjust for maximum meter indication.
7	Thru DUMMY ANT. to ANT. RECEPT.	1630 kHz	High end stop	C_{10}=STEP-7	do.
8	do.	530 kHz	Low end stop	T_1=STEP-8	do.
9	Repeat STEP-7 to STEP-8.				
10	Thru DUMMY ANT. to ANT. RECEPT.	1400 kHz	Rightly tune in SG frequency.	C_5=STEP-10	do.
11	Just tune in a weak station around 1400 kHz with radio and antenna installed in car. If any suitable station is not tuned in, radio's background noise may be employed just as well.			C_1=STEP-11	Adjust for maximum volume or noise.

SCHEMATIC DIAGRAM

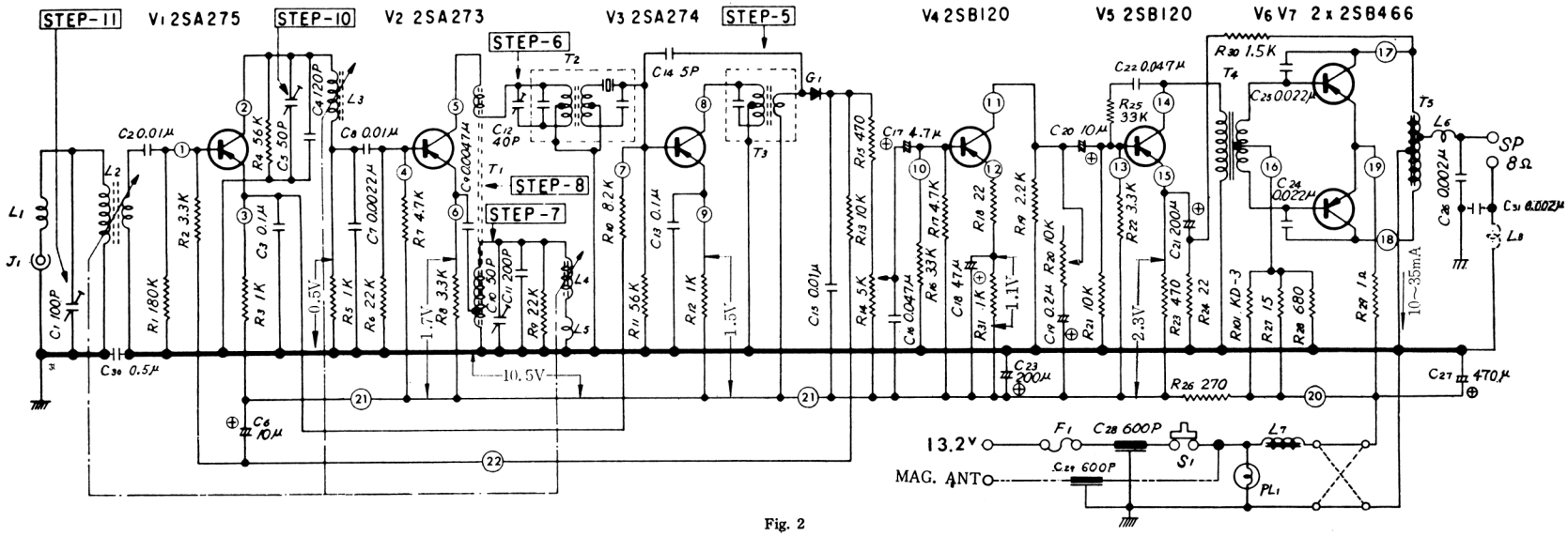

Fig. 2

NOTES:
1. Voltage and current values at no signal, input supply voltage 13.2 volts. These values are nominal and may vary in production.
2. Numerals in circuit in this diagram coincide with those on CHECK POINTS ON PRINTED BOARD in Fig.3.
3. Circuit in dotted lines and C_{30}, C_{31} and L_8 are for Model AT-1150-1 only (positive grounding).
4. For Models AT-1110-1, AT-1120-1 and AT-1140-2 (negative grounding), two points (body and negative line of printed board) connected at C_{30} are connected directly with lead wire.
5. Circuit in chain line (—·—·—) and C_{29} are for Model AT-1140-2 available for magnet antenna.

CHECK POINTS ON PRINTED BOARD

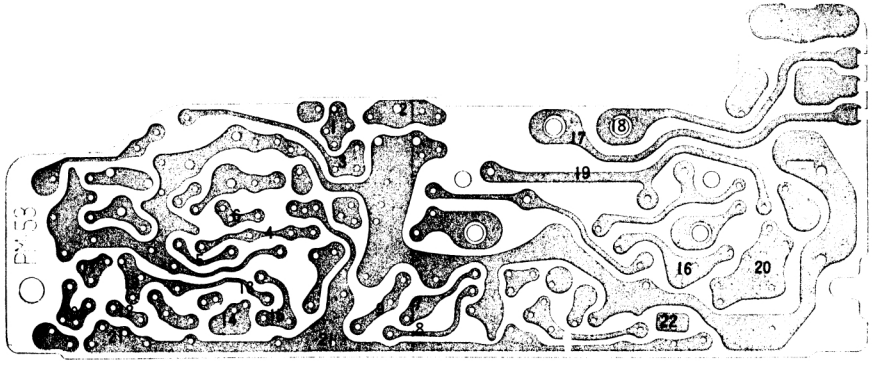

Fig. 3

Ten AR1000, 1110, 1120, 1140, 1150,

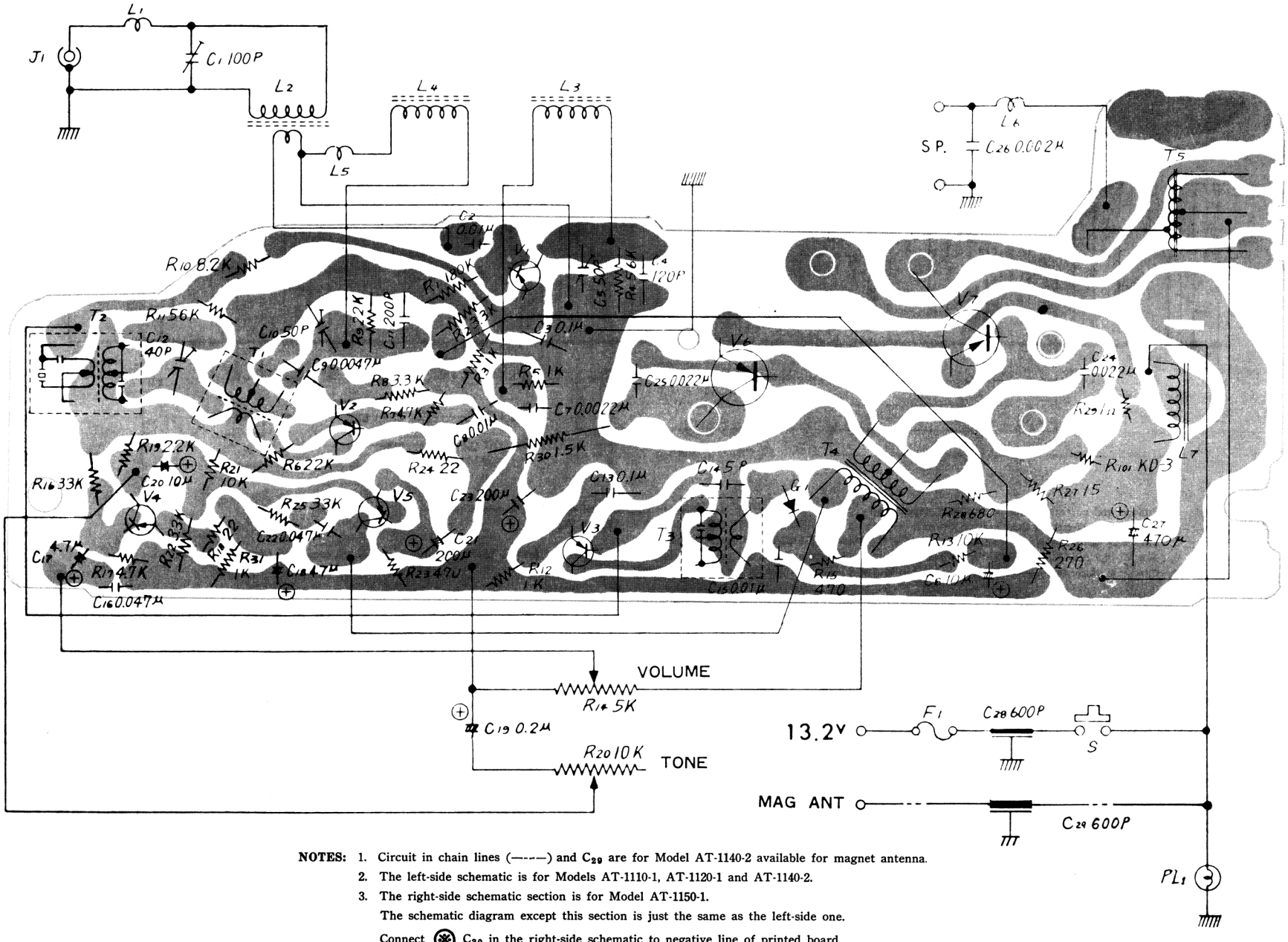

NOTES: 1. Circuit in chain lines (-----) and C_{29} are for Model AT-1140-2 available for magnet antenna.

2. The left-side schematic is for Models AT-1110-1, AT-1120-1 and AT-1140-2.

3. The right-side schematic section is for Model AT-1150-1.

The schematic diagram except this section is just the same as the left-side one.

Connect ⊗ C_{30} in the right-side schematic to negative line of printed board.

AT-1150-1

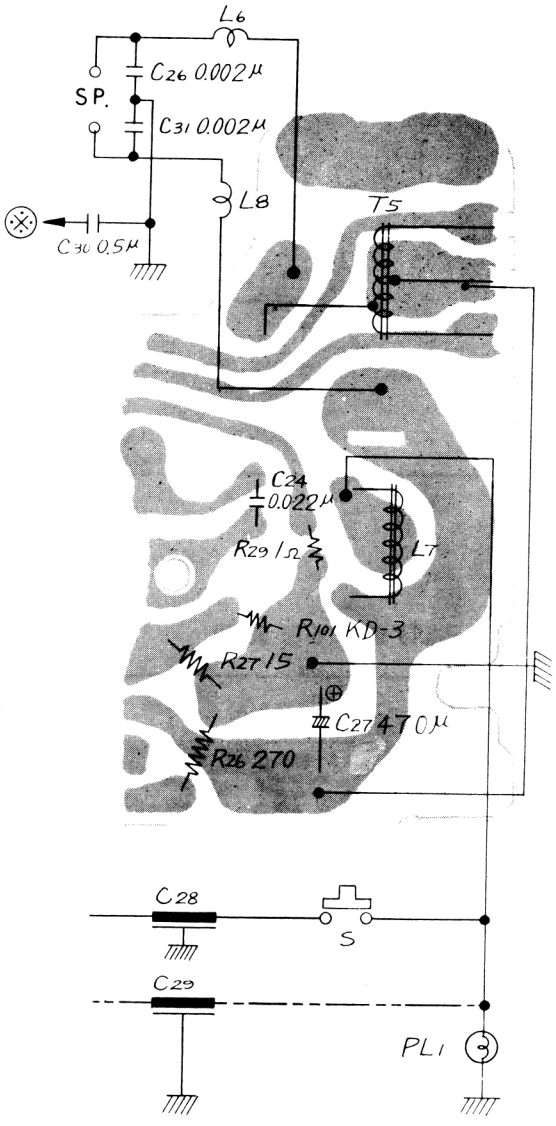

AR-1000 SERIES

IFT & COIL CONNECTION (View from terminal side)

N. B. Values in ohms show DC resistance.

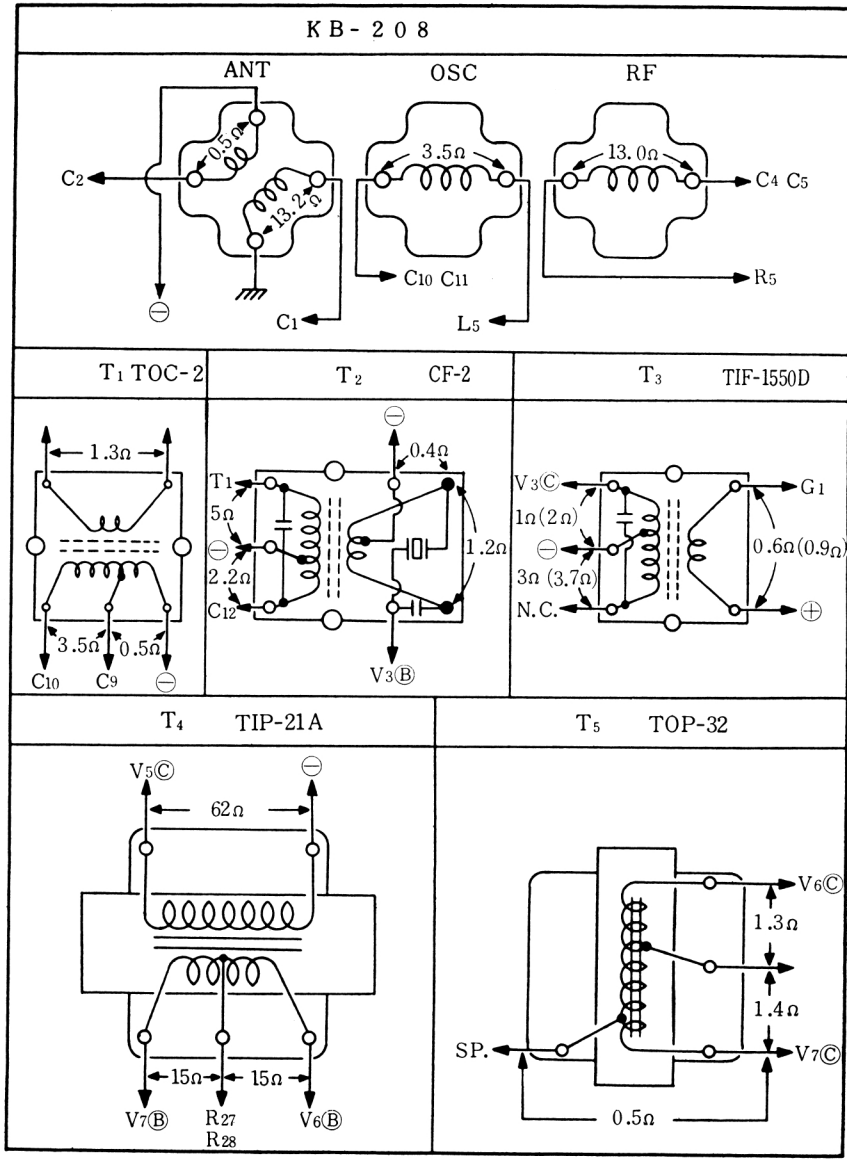

Fig. 5